Montering för Modul

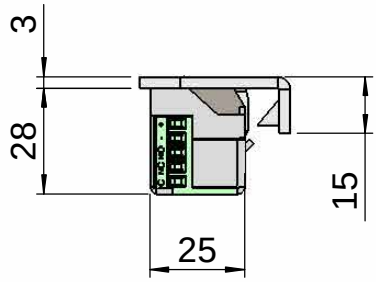

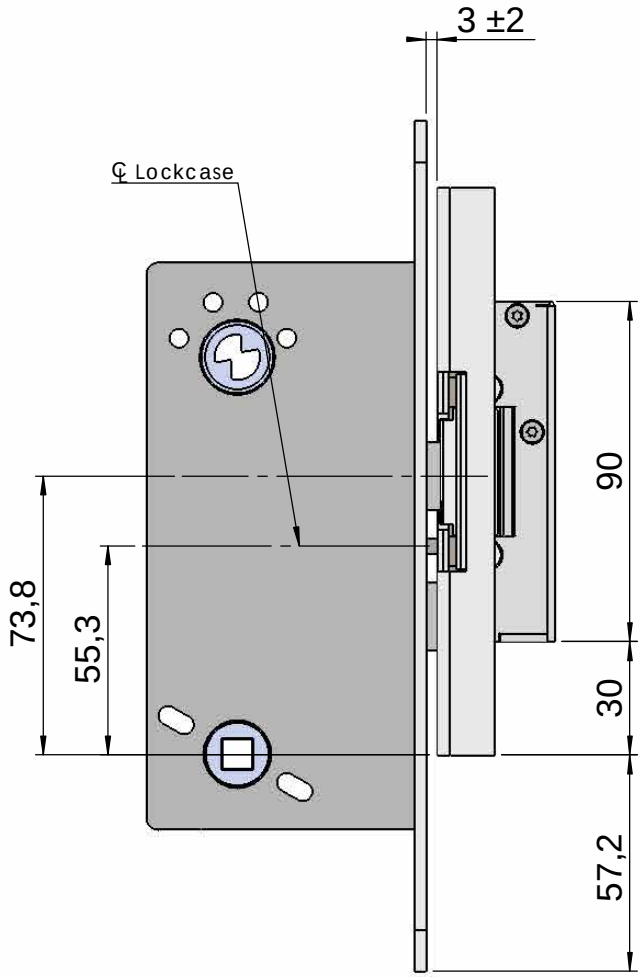

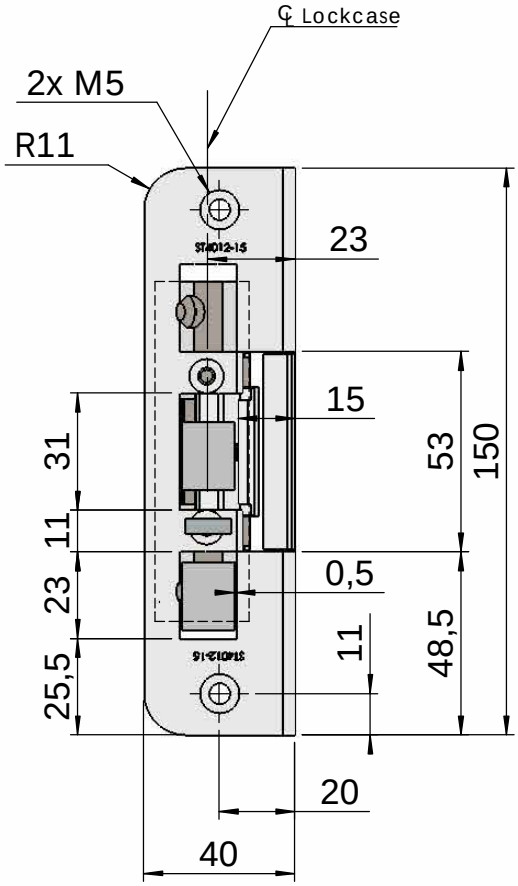

STEP 40 PRELOAD

Owner	Title/Description	
Stendals El AB	STEP 40 med vinklad stolpe plös 15mm Montering för Modul	
	Drawing no. ST4012-15	Scale 1:2

This document shall not be copied without owners written allowance and its content shall not be exposed for third part nor be used for unauthorized purpose.